PCIM

FEBRUARY 1996

PowerConversion & Intelligent Motion

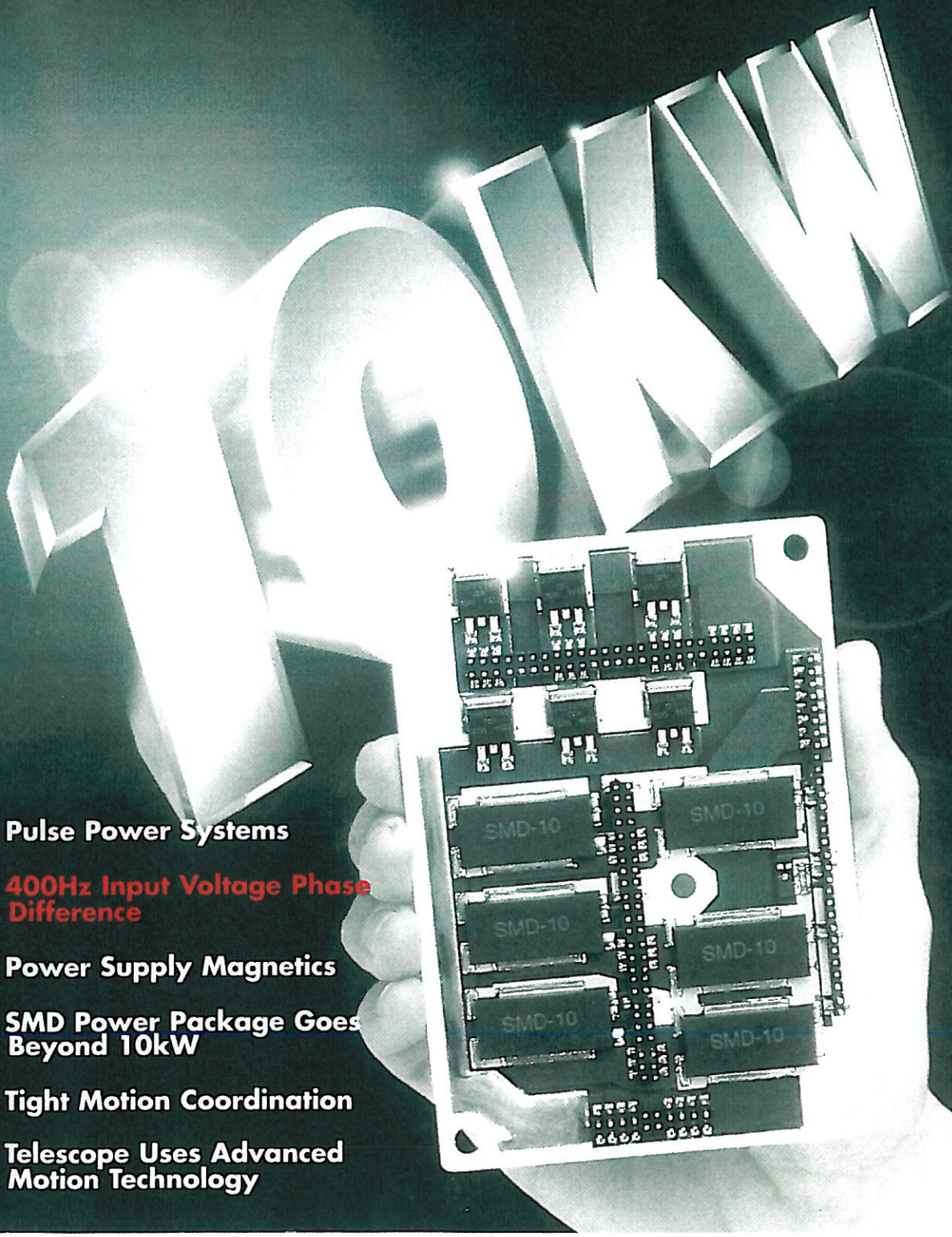

- Pulse Power Systems
- 400Hz Input Voltage Phase Difference
- Power Supply Magnetics
- SMD Power Package Goes Beyond 10kW
- Tight Motion Coordination
- Telescope Uses Advanced Motion Technology

Input Voltage Phase Difference Makes a Difference on 400Hz Supplies

David Ahronowitz, Century Electronics, Westlake Village, California

A difference of only 10 degrees between two phases of the input voltage applied to a 400hz power supply will increase input capacitor voltage ripple and affect the supply's performance.

Typically, there is a small phase difference on the three-phase power source applied to a power supply operating from 400Hz, such as in an airborne application. Per MIL-STD-704E, *Table 1*, the voltage phase difference may range from 116 to 124 degrees. According to MIL-STD-704A paragraph 5.13.3, "The displacement between any adjacent phases shall be within the limits of 120+/-4 degrees. This angle shall be the relative displacement between the zero voltage points on the wave forms of the three phases."

We will investigate the effects of a voltage phase difference on a typical three-phase input airborne power supply. In particular, we will look at the input capacitor voltage ripple and current ripple stress and on the power supply output noise. The analysis will be performed using Micro Cap software whose output will be compared with actual measurements on an oscilloscope.

The power supply circuit model for this study is shown in *Figure 1*. The three-phase input is applied to a bridge with six MUR850 rectifiers. The output filter consists of a 2mH choke and 28µF capacitor. The load is 200Ω. *Figure 2* shows the three phases that are exactly 120 degrees apart, that is, there is zero degree phase displacement. *Figure 3(a)* is the Micro Cap output for two phases that are 120 degrees apart; *Figure 3(b)* is the 'scope output for the same condition.

Input capacitor ripple voltage obtained by Micro Cap is shown in *Figure 4(a)* and *Figure 4(b)* is the 'scope output.

If we now change the phase difference to 10 degrees, as shown in *Figure 5*, the situation changes. The input voltage derived from MicroCap is shown in *Figure 6(a)* and the 'scope display is in *Figure 6(b)*. According to Micro Cap, the input capacitor voltage ripple will now appear as in *Figure 7(a)*, which is verified by the 'scope trace of *Figure 7(b)*. Thus a 10 degree phase difference between two of the input phases causes a

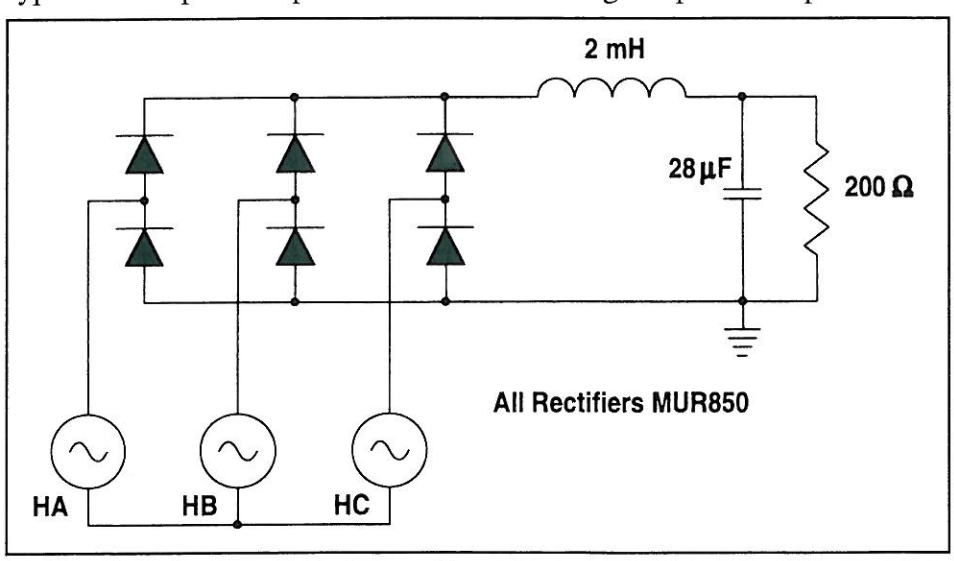

Figure 1. *Three-Phase Power Supply Circuit Model.*

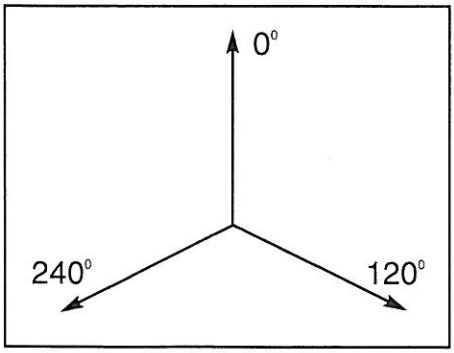

Figure 2. *Vector Diagram of Input Voltages That Are Exactly 120 Degrees Apart.*

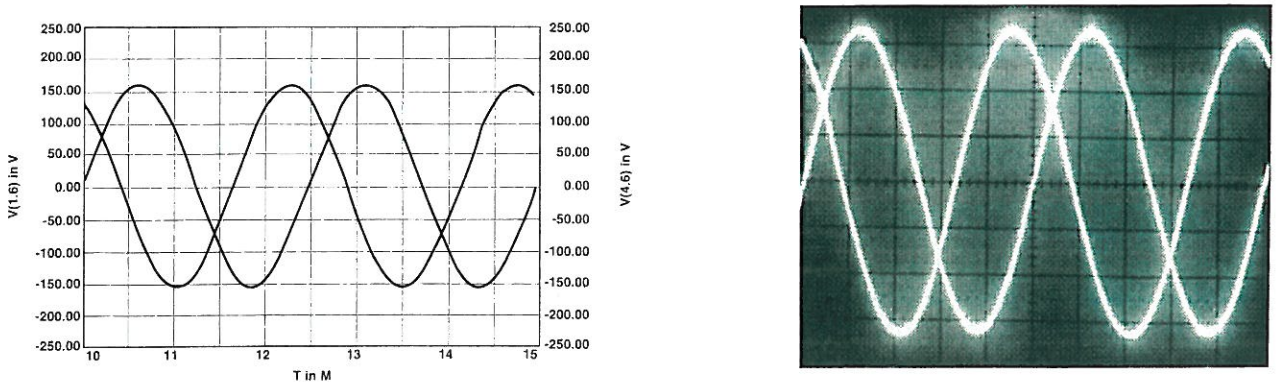

(a) Micro Cap Presentation

(b) Oscilloscope Display.

Figure 3. *Two 120 degree Inputs With No Phase Difference (50V/div., 0.5msec/div.).*

significant change in the input capacitor ripple voltage.

The increase in input capacitor ripple voltage manifests itself in three ways:

• If the power supply does not have good noise rejection capability, this line frequency ripple will show up in the output and increase the supply's noise and ripple levels. A comparison between zero and 10 degrees phase difference is shown in *Figure 8*. *Figure 8(a)* is the supply output with zero degrees input phase difference and *Figure (8b)* is the 10 degree phase difference case. *Figure 9* shows a typical three-phase, 400Hz airborne power supply.

• The higher voltage ripple will reduce the power supply's input voltage range, which will be noticeable at low end of the input voltage range.

• The ripple voltage level increase on the input capacitor will cause higher current ripple. If the capacitor does not have adequate ripple current margin it could overheat and fail.

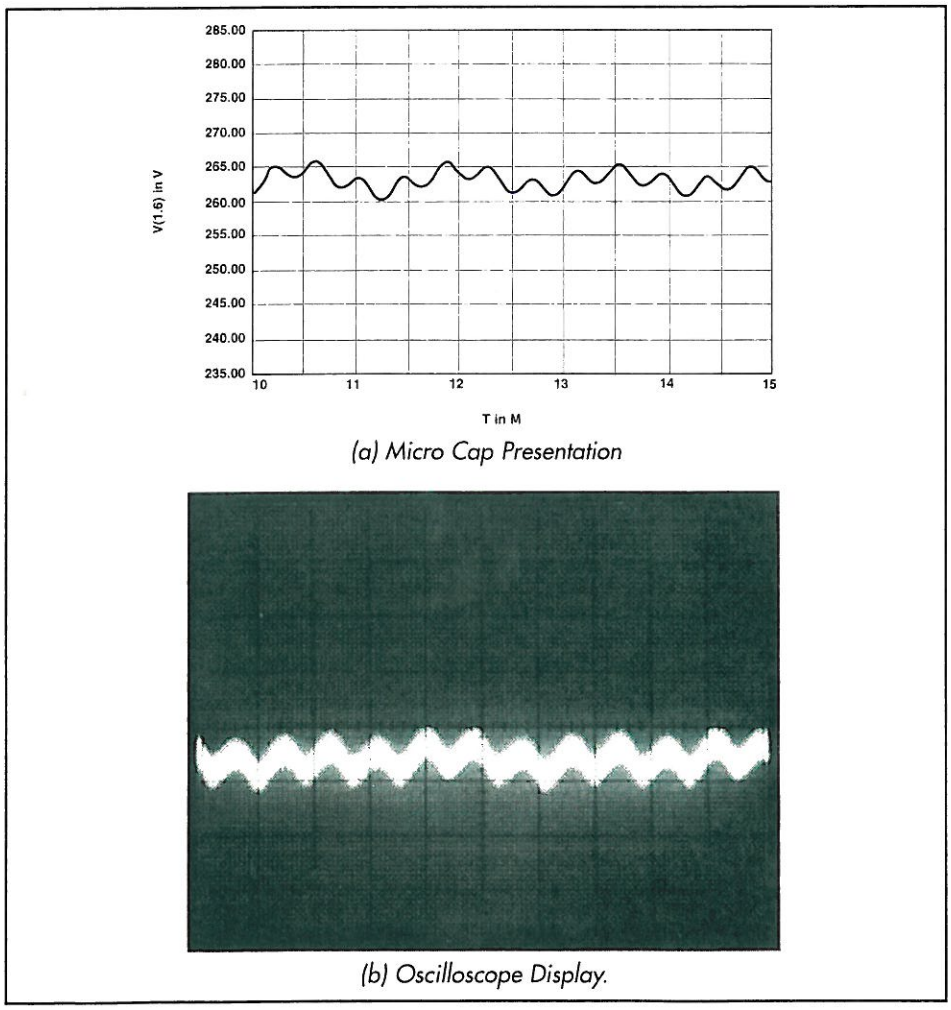

(a) Micro Cap Presentation

(b) Oscilloscope Display.

Figure 4. *Input Capacitor Voltage Ripple With No Phase Difference (Y=5V/div., X=0.5msec/div.).*

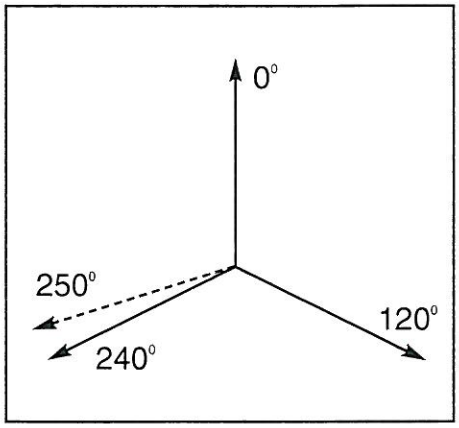

Figure 5. *Vector Diagram of Input Voltages That Have a 10 Degree Displacement Between Two Phases.*

Sherman Chu aided in data acquisition and testing of this project.

Phase Difference

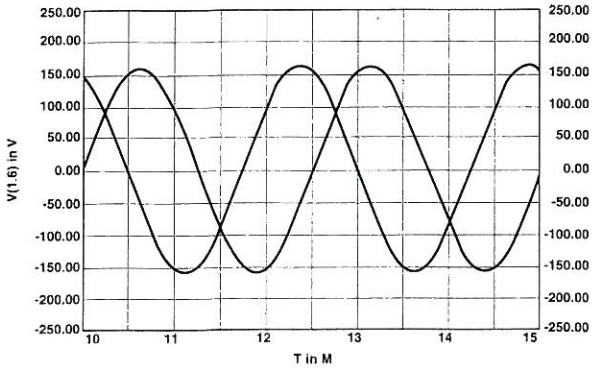

(a) Micro Cap Presentation.

(b) Oscilloscope Display.

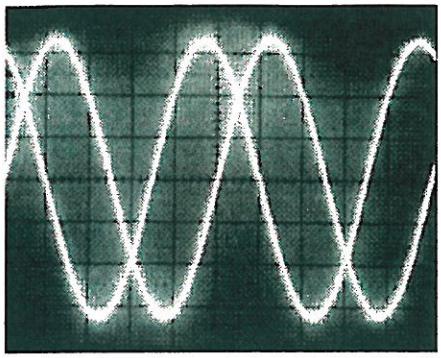

***Figure 6**. Two AC Inputs With 10 Degree Phase Difference (50V/div., 0.5msec/div.).*

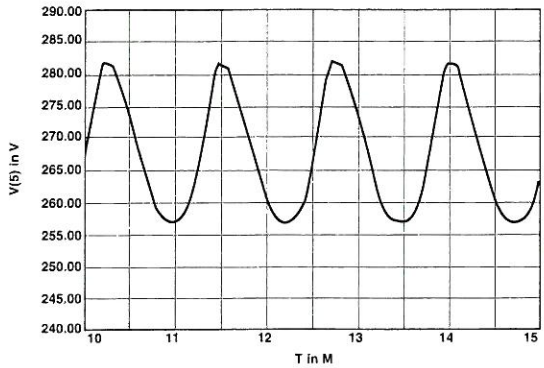

(a) Micro Cap Presentation.

(b) Oscilloscope Display.

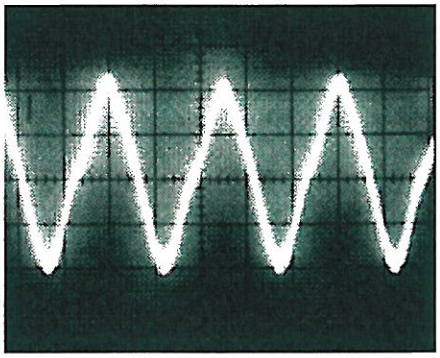

***Figure 7**. Input Capacitor Voltage Ripple With 10 Degrees Phase Difference (Y=5V/div., X=0.5msec/div.).*

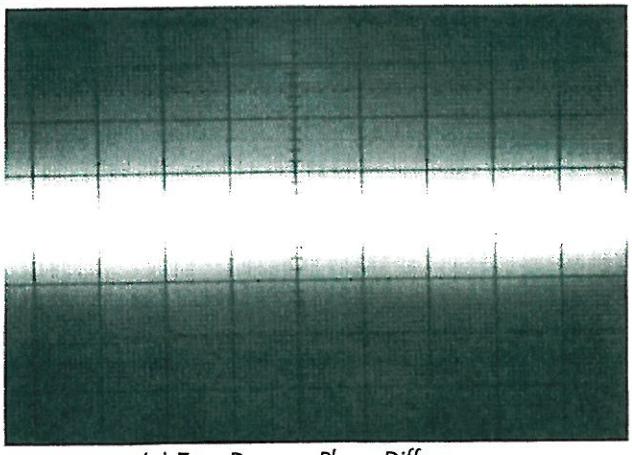

(a) Zero Degrees Phase Difference.

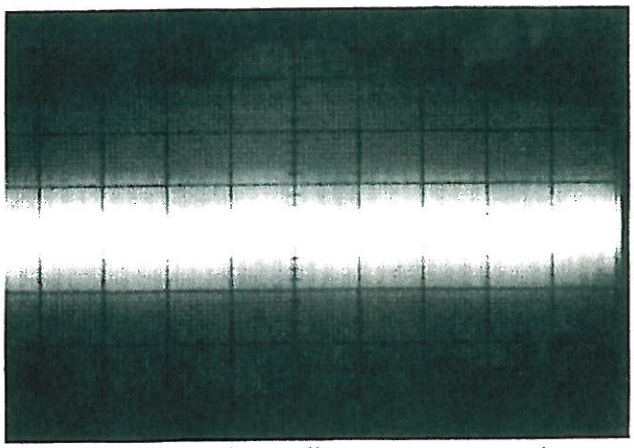

(b) 10 Degrees Phase Difference Between Two Phases.

***Figure 8**. Power Supply Output Noise (Y=20mV/div., X=0.5msec/dic.).*

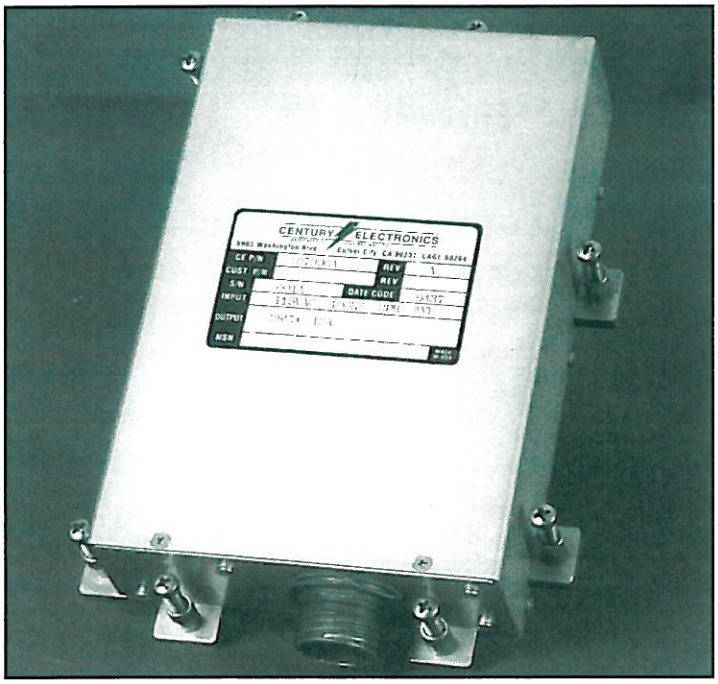

***Figure 9**. Typical Three-Phase Input, 400Hz Airborne Power Supply.*

CENTURY ELECTRONICS
DEDICATED TO HIGH RELIABILITY

5701 Lindero Canyon Road, 1-100 • Westlake Village, California 91362
Phone: (818)706-8224 • Fax: (818)706-8226

Reprinted From Power Conversion & Intelligent Motion, February 1996.